Measurement display MA503/1

Quasi-absolute, mains-independent LCD display, display accuracy 10 µm

Profile

- Display accuracy max. 10 µm or 1/64 inch
- Repeat accuracy ±0.01 mm
- Low-power LCD with decimal and fraction-inch function
- Reading distance ≤2 mm
- Incremental measurement and reset function
- Direct reference/offset value input
- Battery-buffered memory
- Battery operation

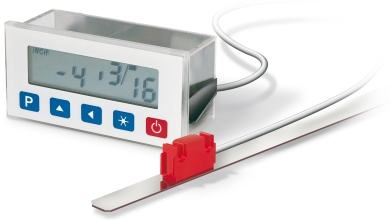

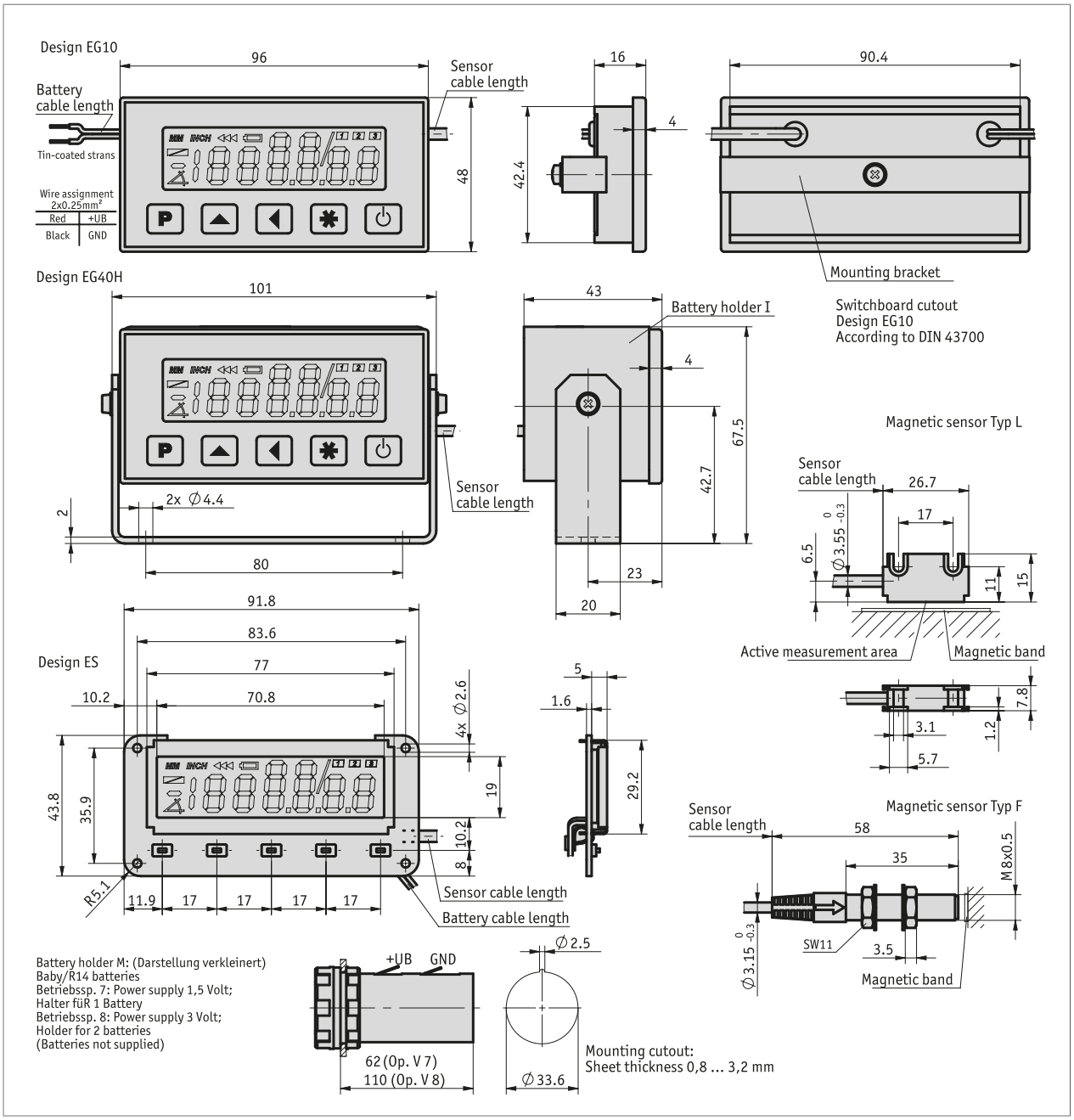

Mechanical data

Feature	Technical data	Additional information
Housing	plastic (transparent)	
Sensor/band reading distance	≤2 mm	
Cable sheath	PVC	4-core ø3.15 $_{-0.3}$ mm (sensor F)
	PVC	4-core ø3.15 $_{-0.3}$ mm (sensor L)

Electrical data

Feature	Technical data	Additional information
Operating voltage	3 V DC	
	1.5 V DC	
Current consumption	≤400 µA	with battery monitoring
Display/display range	Low-power LCD, ~12.5 mm high	decimal to 10 µm, fractional inch to 1/64 inch

System data

Feature	Technical data	Additional information
Resolution	≤0.01	programmable
System accuracy	±(0.1 + 0.01 x L) mm, L in m	
Repeat accuracy	±0.01	
Travel speed	≤5 m/s	

Ambient conditions

Feature	Technical data	Additional information
Ambient temperature	0 ... -30 °C	
Storage temperature	60 ... 80 °C	
Relative humidity		condensation inadmissible
Protection category	IP40 whole device	EN 60529
	IP54 at the front	EN 60529
	IP67 sensor	EN 60529

pin assignment

Signal	Cable color
GND	black
+UB	red

Hint for mounting

A, Sensor/tape reading distance	≤2 mm
B, Lateral offset	±2 mm
C, Alignment error	±3°
D, Longitudinal inclination	±1°
E, Lateral inclination	±3°

The length of the cable between the sensor and connector cannot be subsequently increased or decreased.

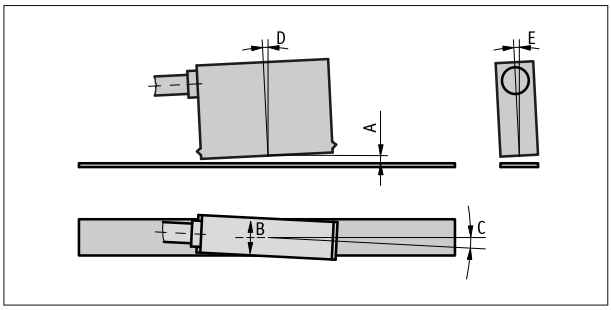

Symbolic representation

Order

Ordering information

One or more system components are required:

Magnetic tape MB500/1 www.siko-global.com

Ordering table

Feature	Ordering data		Specification	Additional information
design	A	EG10	Rack	
		EG40H	housing with mounting bracket	
		ES	installation kit	
Operating voltage	B	7	3 V DC	
		8	1.5 V DC	only with ES
Magnetic sensor	C	L	rectangular	
		F	round	
Sensor cable length 1	D	...	0.30, 0.50, 1.00, 1.5, 2.0 in m	
			others on request	
battery cable length	E	...	00.2, 00.3, 00.5, 01.0, 01.5, 02.0 in m	
			others on request	
Electrical connection	F	L	litz wires	only with EG10, ES
		wo	without	only with EG40H
battery holder	G	M	with	
		0	without	
		I	integrated	only for EG40H with operating voltage 7

Order key

MA503/1 - [ ] - [ ] - [ ] - 1 - [ ] - wo - [ ] - [ ] - S - SF-80850 - wo - [ ]

A B C D E F G

Scope of delivery:
MA503/1, Quick Start Guide

Subject to technical alterations and errors | 2026/03/05 | 17:09